Industrial Glass Thermometer

Adjustable Connection, 9" Scale

Type TI.901 & TI.701

Thermometers

Application
Process piping, HVAC/R, plumbing, water treatment, boilers, diesel engines and compressors

Size
9” (228.6 mm) - Type TI.901
7" (177.8 mm) - Type TI.701

Accuracy
+/- 1 scale division

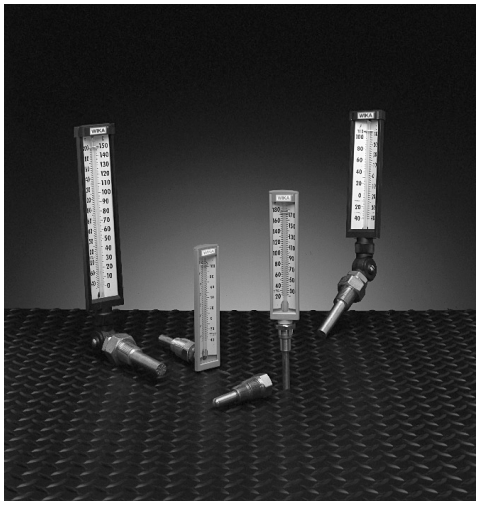

Standard Features

Case
Black, V-shaped molded GE Valox® 735 polyester

Connection
1 1/4-18 Swivel Nut only; withoyt thermowell
¾” NPT brass thermowell; ¾” NPT brass thermowell with Lag; ¾” NPT brass union hub, Duct flange

Adjustable Joint
Matching GE Valox® joint completely encloses capillary for thermal system protection

Locking Device
Provides 360° positioning of thermometer case and stem

Stem
Aluminum tapered metal to metal contact. Graphite conducting media between bulb chamber & glass

Stem Lengths
3-1/2”, 6’, 9”, 12”

Tube & Capillary
Magnifying lens
Blue reading liquid
(Red liquid or mecury fill optional- consult factory)

Measuring Element:
Mercury

Window
Glass

Scale
Permanently baked-on, bold black graduations are printed on white-coated aluminum

STANDARD RANGES		
Single Scale Fahrenheit	**Dual Scale F & C**	**Single Scale Celsius**
-40/110 F	-40/110 F & -40/43 C	-40/50 C
-10/180 F	-10/180 F & -20/45 C	-20/45 C
-20/120 F	0/120 F & -17/49 C	0/50 C
0/120 F	0/160 F & -15/70 C	0/100 C
0/160 F	30/180 F & 0/80 C	0/160 C
30/180 F	30/240 F & 0/115 C	-----
30/240 F	30/300 F & 0/150 C	-----
30/300 F	50/550 F & 10/290 C	-----
50/550 F	50/750 F & 10/400 C	-----

Dimensions:

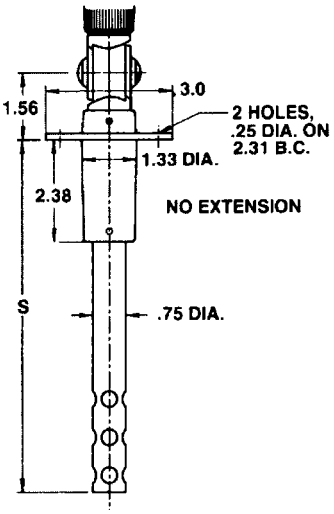

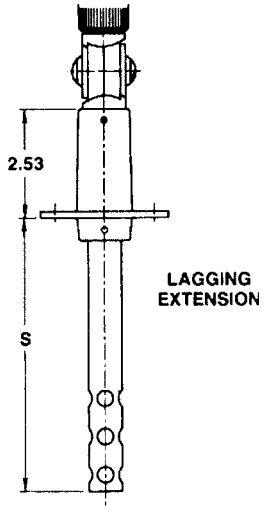

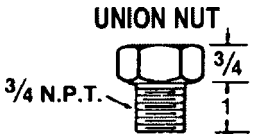

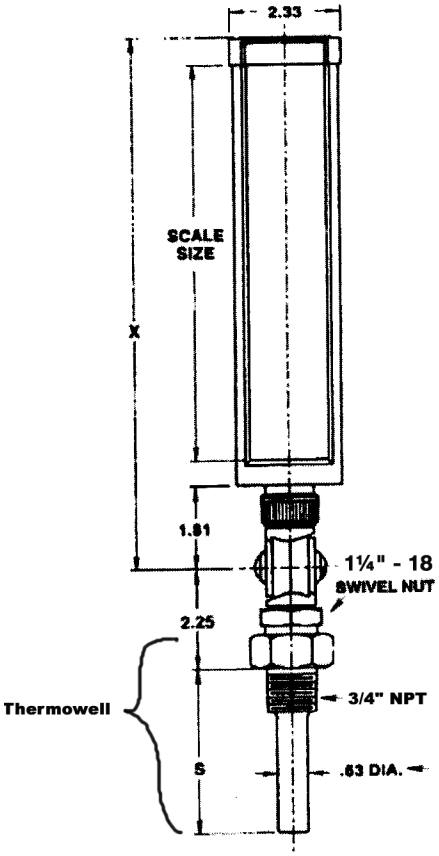

Shown with thermowell

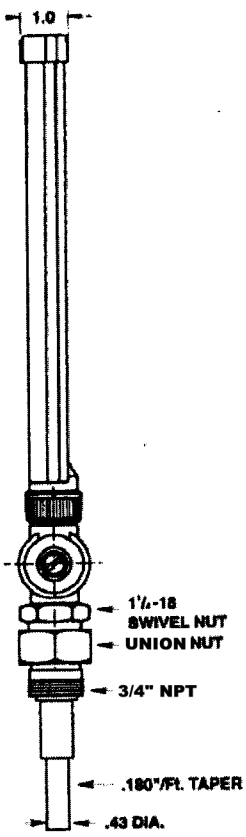

Shown with union nut
(without thermowell)

THE MEASURE OF
Total Performance™

Ordering Information:
State computer part number (if available) / type number / size / range / connection size and location / options required.

Specifications given in this price list represent the state of engineering at the time of printing.
Modifications may take place and the specified materials may change without prior notice

05/02

WIKA Instrument Corporation
1000 Wiegand Boulevard
Lawrenceville, Georgia 30043-5868
Tel: 770-513-8200 Fax: 770-338-5118
http://www.wika.com e-mail: info@wika.com